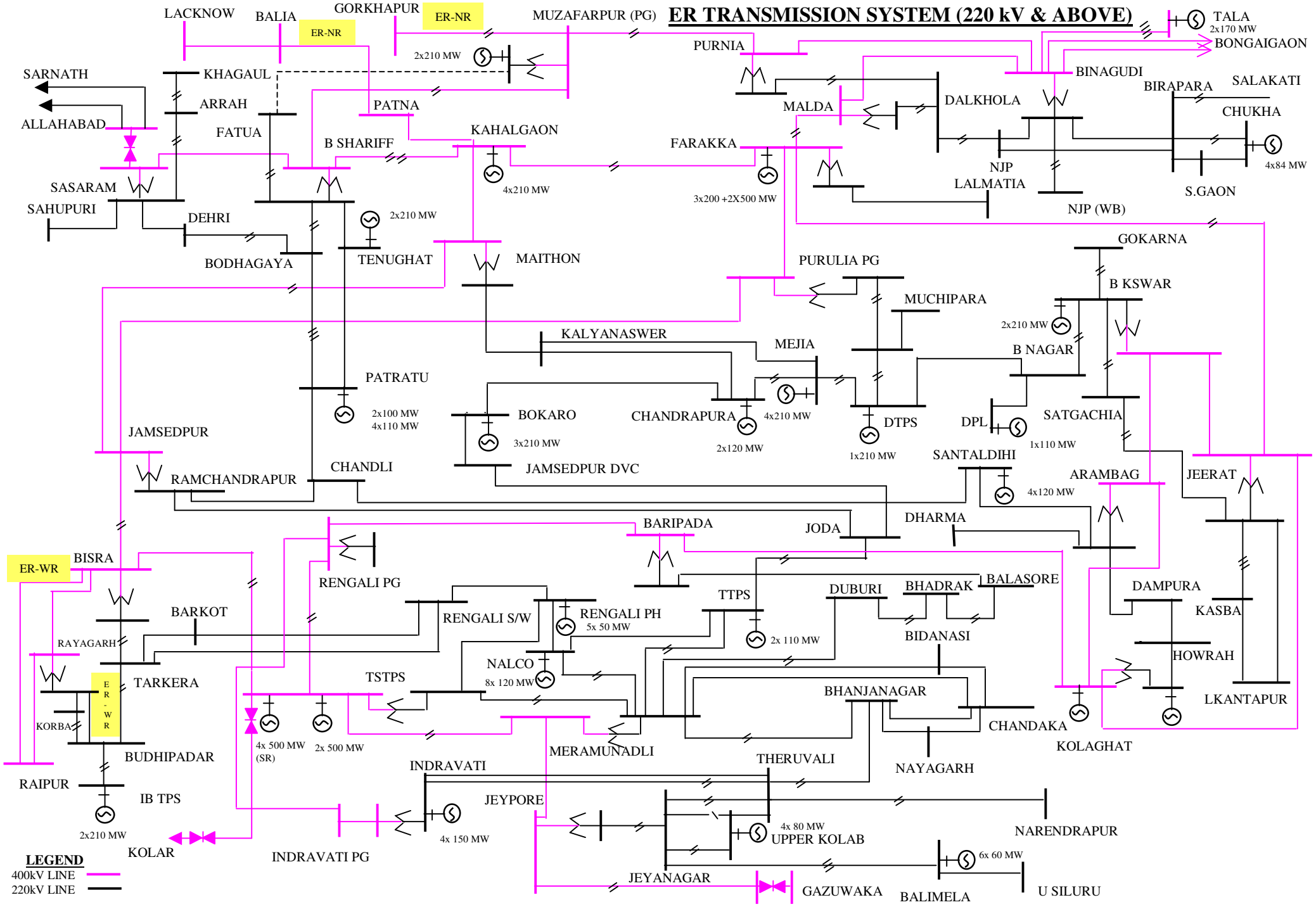ER TRANSMISSION SYSTEM (220 kV & ABOVE)